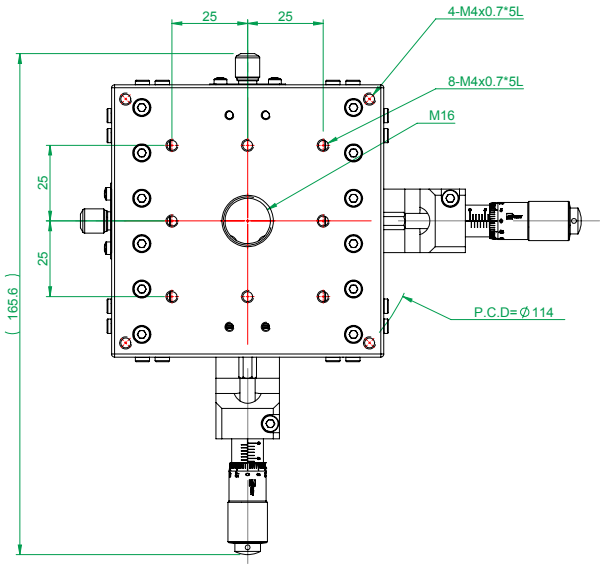

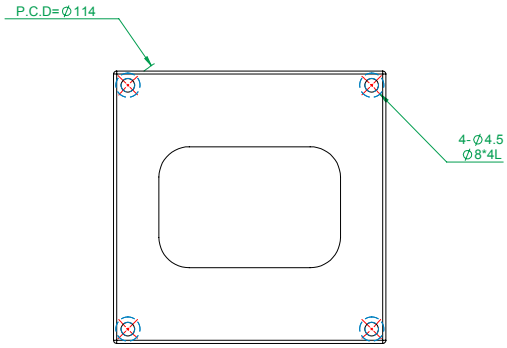

MX(Y)L90-A series
bottom plate
mounting holes

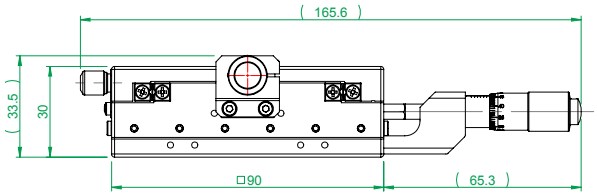

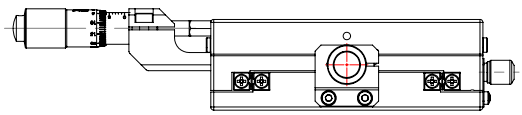

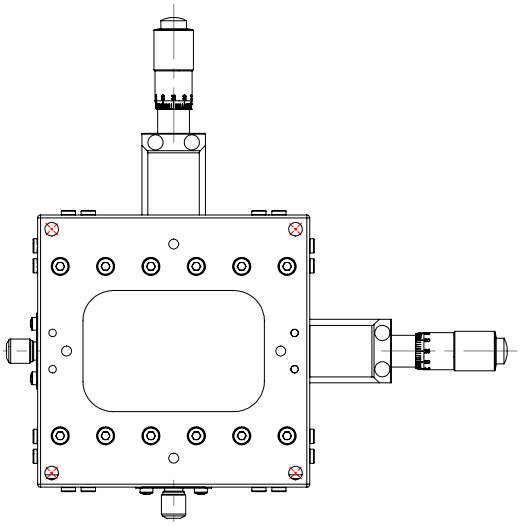

Model	MYL90-AC		
	Low-profile Aluminum		
	XY Translation Stage		
Scale	1:2.5	W:	799.59g

LASER AND

www.laserand.com
TEL:514 452-4693
sales@laserand.com