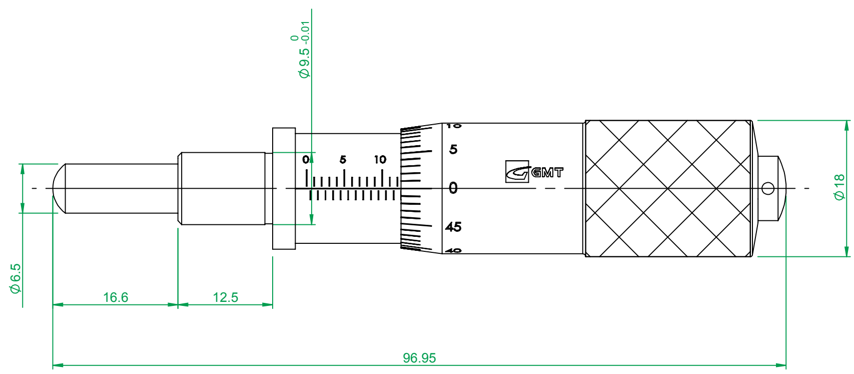

LASER AND

www.laserand.com

TEL:514 452-4693

sales@laserand.com

Model	MHGS-SP-25
	Micrometer Head
Scale	1:1
W:	100.2g