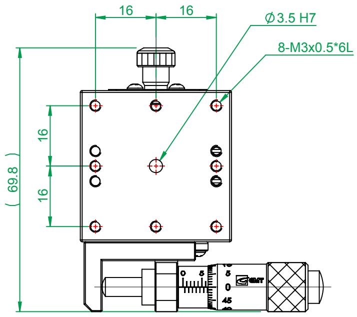

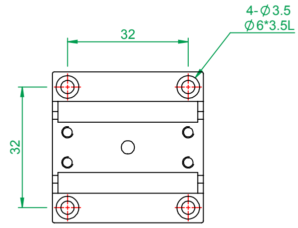

MX(Y)40-S series
bottom plate
mounting holes

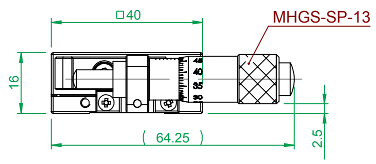

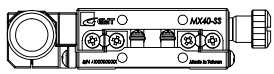

Model	MX40-SS
	Precision Linear Translation Stage

LASER AND
www.laserand.com
TEL:514 452-4693
sales@laserand.com

Scale 1:2 W: 209.90g