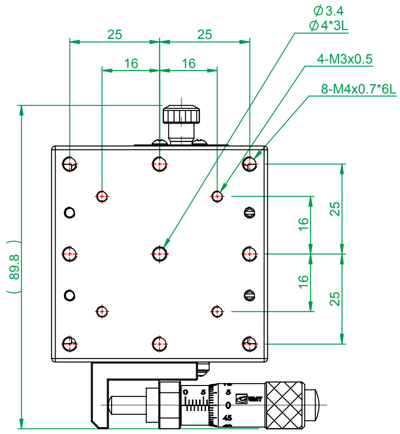

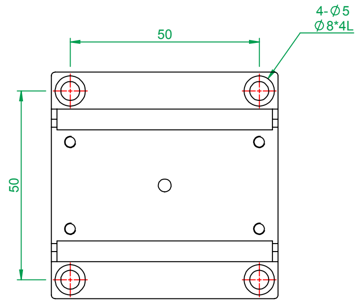

MX(Y)60-S series
bottom plate
mounting holes

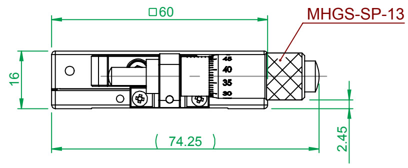

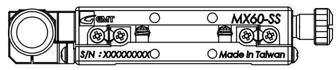

Model	MX60-SS	
	Precision Linear Translation Stage	
Scale	1:2	W: 394.30g

LASER AND
www.laserand.com
TEL:514 452-4693
sales@laserand.com