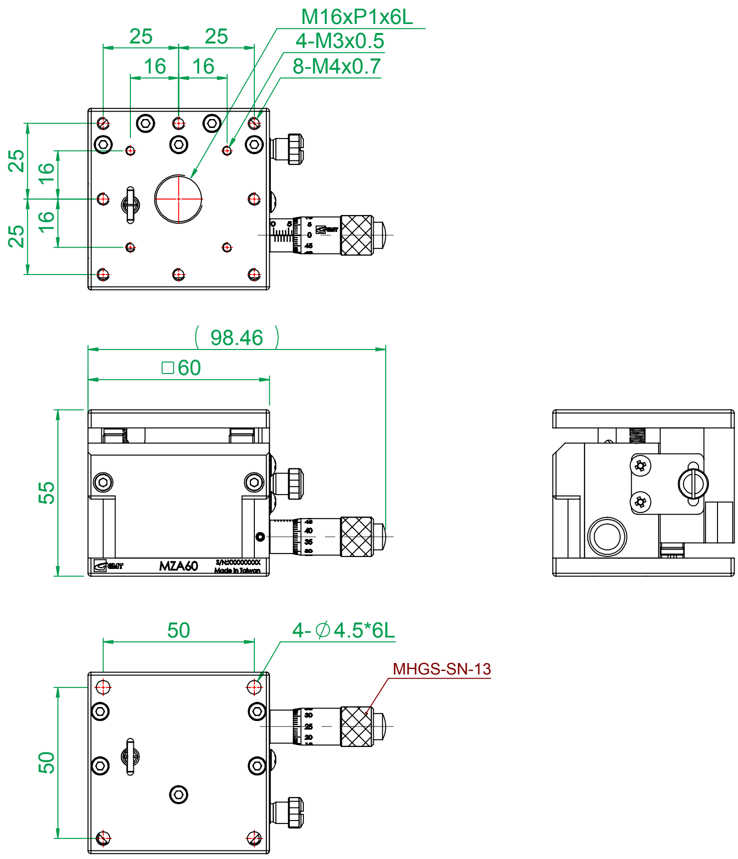

Scale

MZA-60

Crossed-roller vertical translation stage

LASER AND

www.laserand.com

TEL:514 452-4693

sales@laserand.com

Scale 1:2 W: 530.00g

版次