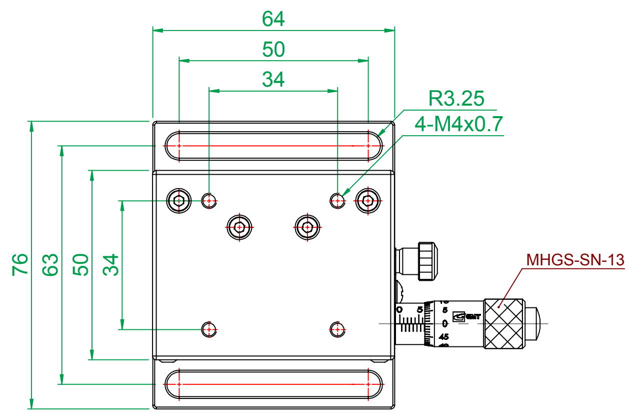

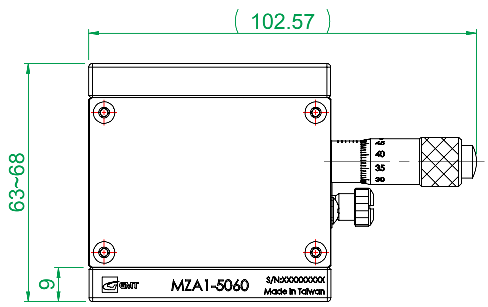

www.laserand.com

TEL:514 452-4693

sales@laserand.com

Model	MZA1-5060
	Crossed-roller vertical translation stage
Scale	1:2
W:	623.57g